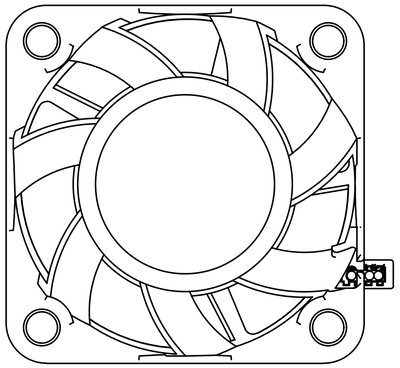

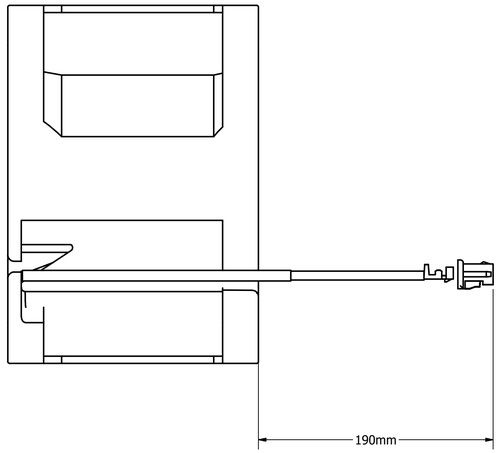

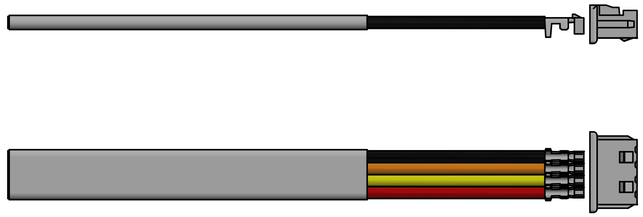

TABLE			
Column 1	Column 2	Column 3	Column 4
ITEM	QTY	PART NUMBER	DESCRIPTION
1	4	Molex 50058-8100	crimpterminal
2	1	Molex 510210400	1.25mm Pitch PicoBlade
3	1	San Ace40 Fan 9GA0412P3H01	Fan
4	1	shrink tube 10mm diameter	shrink tube

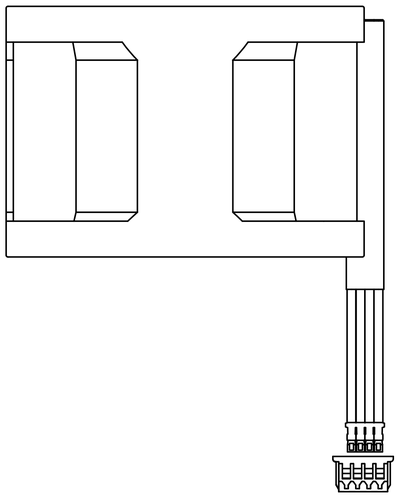

PARTS LIST			
ITEM	QTY	PART NUMBER	DESCRIPTION
4	1	FA10000681 sticker	
5	1	5763-PWRSan_Ace_DC_40GA28_RD	STEP AP203

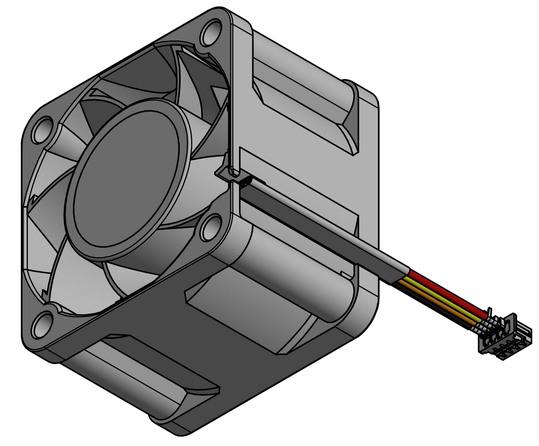

DRAWN	22.02.2019		
zechnerf			
CHECKED		TITLE	
QA			
MFG			
APPROVED		SIZE D	DWG NO FA10000681 REV
		SCALE 3 : 1	SHEET 1 OF 1